75G/85G EXCAVATORS

8143–8729-kg (17,952–19,244 lb.) Operating Weight

JOHN DEERE

Fit in more productivity.

Neither too big nor too small, these right-size excavators are the perfect solution for a wide variety of tasks. Their reduced-tail-swing configurations provide extra flexibility, enabling them to maneuver nimbly and work efficiently in and around congested conditions. What's more, the 85G comes equipped with the extra advantage of an independent-swing boom that lets it work even closer to curbs, parallel to structures, or in the midst of traffic. Inside their spacious, comfortable cabs, easy-to-navigate enhanced LCD monitors let operators easily dial-in a wealth of machine info and functionality. Of course, these two meet EPA Final Tier 4 (FT4)/EU Stage IV regulations, so they're a perfect fit for your equipment fleet for years to come.

Key specifications	75G	85G
Net rated power	42.4 kW (56.9 hp)	42.4 kW (56.9 hp)
Operating weight	8143 kg (17,952 lb.)	8729 kg (19,244 lb.)
Maximum digging depth	4.61 m (15 ft. 1 in.)	4.51 m (14 ft. 10 in.)
Arm digging force	30.7 kN (6,902 lb.)	30.7 kN (6,902 lb.)
Bucket digging force	46.6 kN (10,476 lb.)	46.6 kN (10,476 lb.)

Undercarriage options include rubber tracks, or sealed and lubricated chain with rubber pads or steel semi-grousers from 450–600-mm (18 to 24 in.) wide. These, plus numerous arm and bucket options, let you spec the right excavator for the way you work.

Large entryways and virtually unrestricted sightlines combine with spacious operator stations to provide all the comfort, convenience, and visibility an operator could want.

Engine performance and hydraulic flow are perfectly balanced for predictable operation. Two productivity modes allow you to choose the digging style that fits the job. **Power** delivers a balance of speed and fuel economy for normal operation. **Economy** reduces top speed and helps save fuel.

Want to add a hammer or other attachment? High-pressure, high-flow auxiliary hydraulic packages meet the need.

Choose from a variety of track widths, arm lengths, buckets, and other options to maximize your efforts.

Two-speed propel with AutoShift helps speed machine moves and maximize maneuverability.

These two transport easily between jobsites, making them perfect for "dig-and-go" jobs.

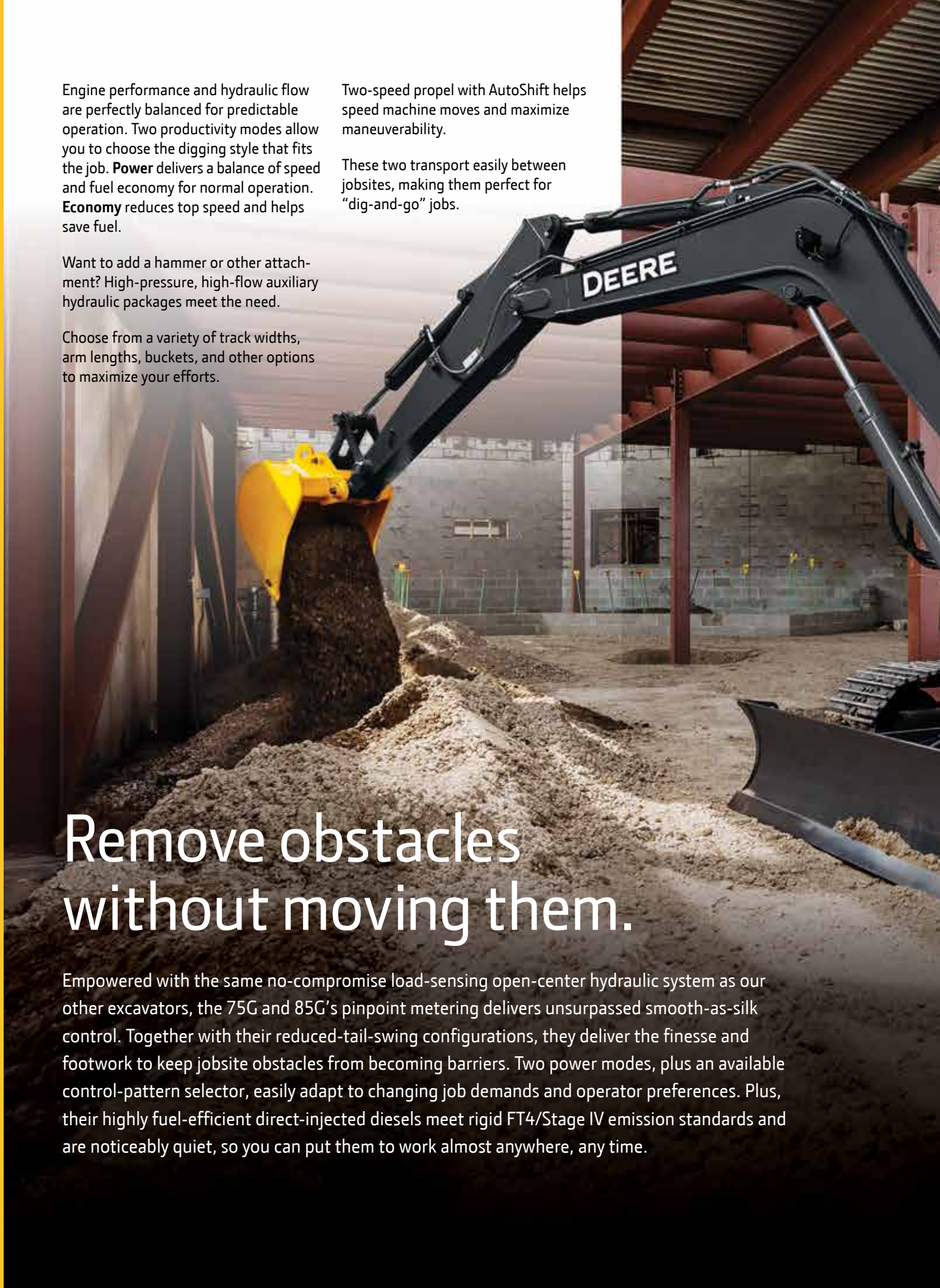

Remove obstacles without moving them.

Empowered with the same no-compromise load-sensing open-center hydraulic system as our other excavators, the 75G and 85G's pinpoint metering delivers unsurpassed smooth-as-silk control. Together with their reduced-tail-swing configurations, they deliver the finesse and footwork to keep jobsite obstacles from becoming barriers. Two power modes, plus an available control-pattern selector, easily adapt to changing job demands and operator preferences. Plus, their highly fuel-efficient direct-injected diesels meet rigid FT4/Stage IV emission standards and are noticeably quiet, so you can put them to work almost anywhere, any time.

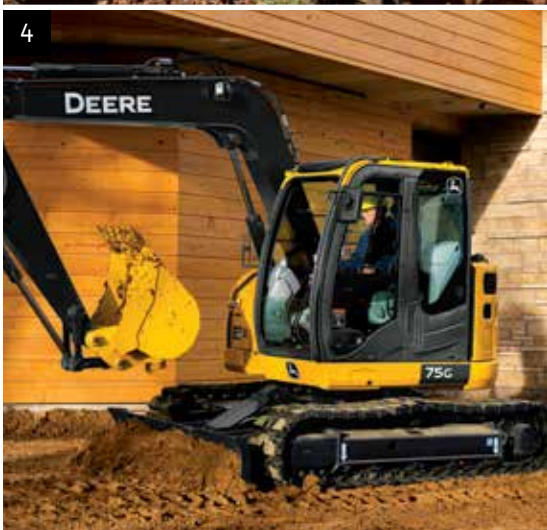

1. For work that requires extra finesse, the G-Series' short-throw low-effort controls, unmatched metering, and smooth multifunction operation give the precision you need.

2. Optional rubber track pads or heavy-duty rubber belts let these excavators set up and work on paved surfaces and even cross curbs without doing damage.

3. Why let obstacles dictate the way you work? The 85G's 360-deg. rotation and independent-swing boom let you get in tight and even dig parallel to structures.

4. Although it won't replace a grading tractor, the standard blade enables these excavators to fill-in quite capably. Works well for increasing agility and stability on slopes, too.

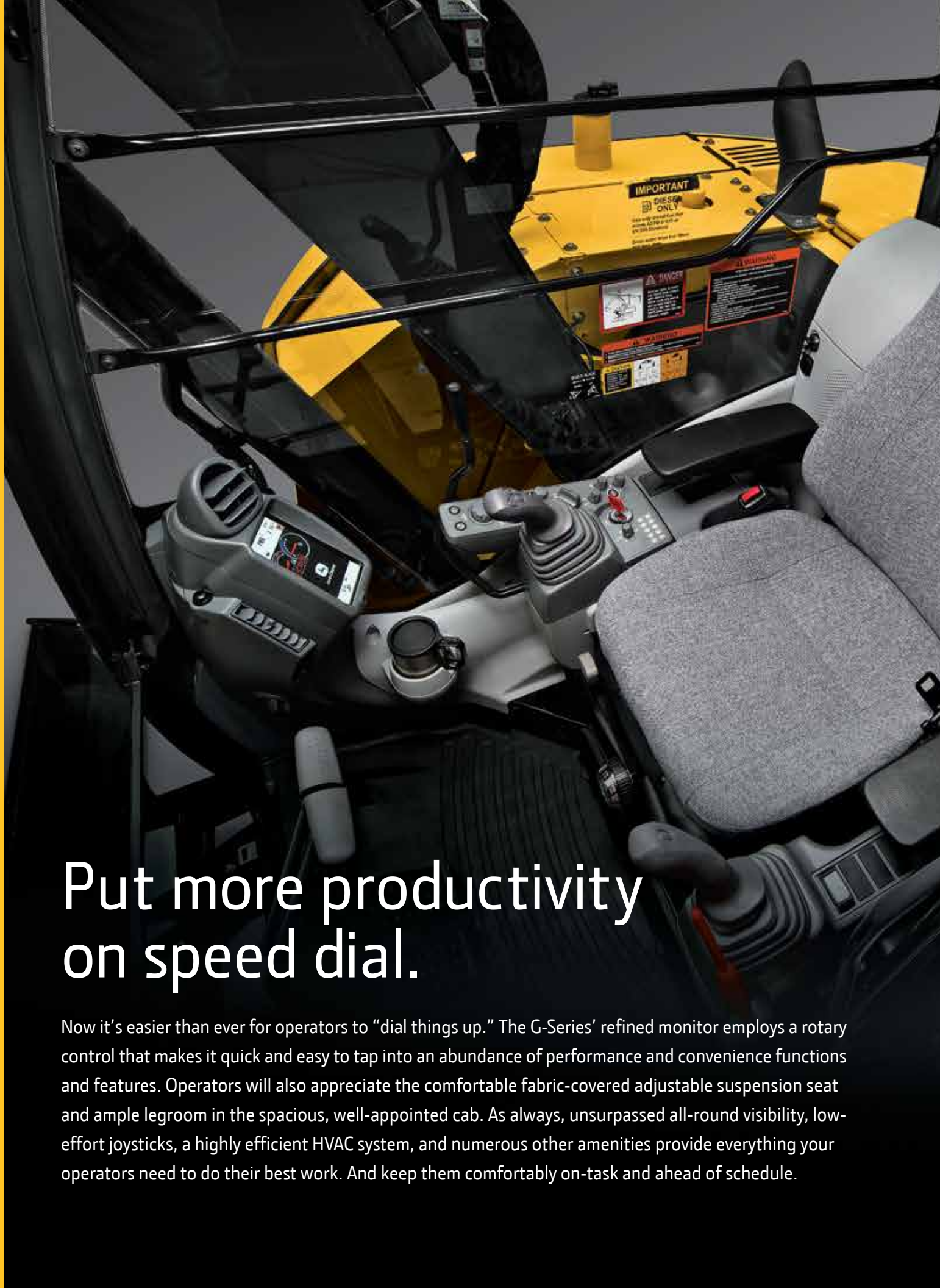

Put more productivity on speed dial.

Now it's easier than ever for operators to "dial things up." The G-Series' refined monitor employs a rotary control that makes it quick and easy to tap into an abundance of performance and convenience functions and features. Operators will also appreciate the comfortable fabric-covered adjustable suspension seat and ample legroom in the spacious, well-appointed cab. As always, unsurpassed all-round visibility, low-effort joysticks, a highly efficient HVAC system, and numerous other amenities provide everything your operators need to do their best work. And keep them comfortably on-task and ahead of schedule.

1. Wide expanse of front and side glass, narrow front cab posts, large tinted overhead hatch, and numerous mirrors provide virtually unrestricted all-around visibility.

2. Optional lockable control-pattern selector valve enables you to switch from backhoe- to SAE-style controls with just a twist of your wrist.

3. Multi-language LCD monitor and rotary dial provide intuitive access to a wealth of information and functions. Just turn and tap to select work mode, access operating info, check maintenance intervals, source diagnostic codes, adjust cab temperature, and tune the radio. Plus much more.

With large self-cleaning steps and wide entry-ways, getting in and out of our excavators has never been easier.

Spacious cab is comfortable and noticeably quiet. Silicone-filled mounts effectively isolate noise and vibration.

We've got your back with sculpted mechanical-suspension multi-position mid- and high-back seats *(75G cab shown)*.

Automatic, high-velocity bi-level climate-control system with automotive-style adjust-able louvers helps keep the glass clear and the cab comfortable.

Cab includes a cup holder and storage com-partment with nearby power port for a cell phone. The 75G also has a cab-side storage box for a grease gun, tools, or other necessities.

Ergonomically correct short-throw joysticks provide smooth, predictable fingertip control with less movement or effort.

Standard boom/frame lights illuminate the way to extend your day beyond daylight hours.

Nothing runs like this Deere.

Just like you, our 75G and 85G Excavators won't quit. These dependable workers deliver unsurpassed reliability, with job-proven digging structures and hydraulic, electrical, and undercarriage components. Their highly efficient cooling systems keep things running cool, even in high altitudes or tough environments. Other durability-enhancing "extras" include tungsten-carbide-coated wear surfaces and oil-impregnated bushings. When you know how they're built, you'll run a Deere.

A John Deere exclusive, three welded bulkheads within the boom resist torsional stress for unsurpassed durability.

Rigid, reinforced D-channel side frames resist impacts, providing maximum cab and component protection.

Oil-impregnated bushings enhance durability and extend grease intervals to 500 hours for the arm-and-boom joint and 100 hours for the bucket joint.

Durable shields deflect material and impacts, protecting the blade cylinder and propel motors.

Tungsten-carbide coating creates an extremely wear-resistant surface to protect the all-important bucket-to-arm joint.

Viscous fan continuously adjusts speed as necessary for effective cooling. Helps reduce noise and fuel consumption, too.

To help prevent accidental machine movement, a spring-applied, hydraulically released park brake automatically engages when a control lever is released.

Wet-disc swing brake delivers long-term maintenance-free performance.

1

2

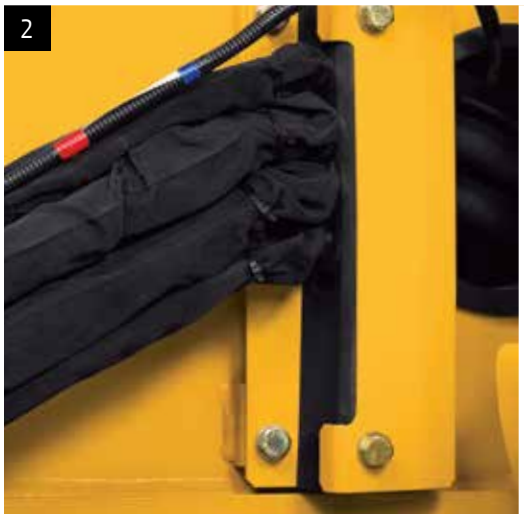

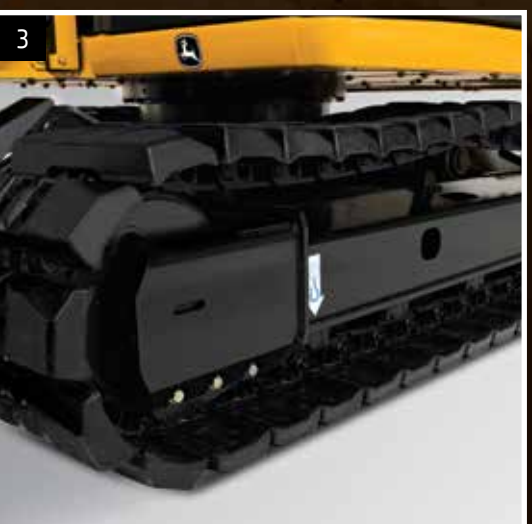

1. Box-section track frames, thick-plate single-sheet mainframe, and large swing bearing deliver rock-solid durability.

2. Wear-resistant hoses are routed, secured, and guarded for long-term durability. Cordura® covering and wire wrapping adds an extra degree of protection to exposed hoses. O-ring face-seal couplers virtually eliminate leaks.

3. Large idlers, rollers, and strutted links in the sealed and lubricated undercarriage deliver long and reliable performance. Optional heavy-duty rubber track pads provide the long-term durability of a steel undercarriage, yet are easy on hard surfaces such as asphalt or concrete.

Operating costs are reduced, too.

It's likely that it was the G-Series' compact stature that caught your eye. But it's their reduced daily operating costs that'll really turn your head. Daily and periodic maintenance are quick, easy, and convenient, with large, easy-open doors providing wide-open access to grouped service points. Extended hydraulic and engine oil-change intervals reduce downtime and expense. Plus the easy-to-read LCD monitor lets you track fluid-maintenance intervals to help manage uptime.

1. LCD monitor tracks scheduled maintenance intervals and issues reminders. Should a problem arise, it provides diagnostic information to assist in troubleshooting and decrease downtime.

2. Vertical spin-on fuel filter and water separator are conveniently located in the right rear compartment for quick and convenient ground-level service access.

3. Left rear compartment houses the battery, engine air filter, fresh-air cab filter, and side-by-side coolers.

4. Sight gauges and see-through reservoirs allow hydraulic, coolant, and window-washer fluid-level checks at a glance.

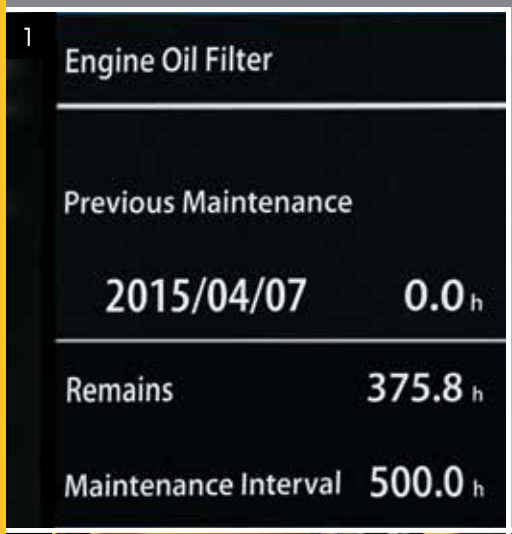

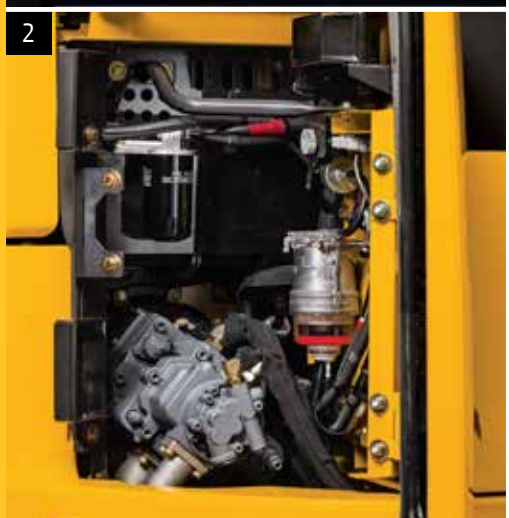

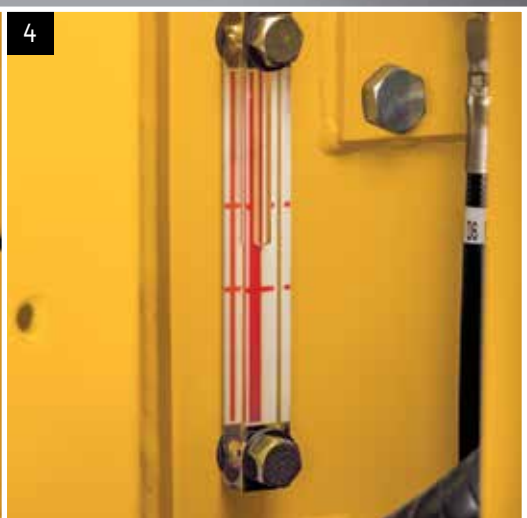

Large hinged doors provide wide-open access to service items. Lube banks, filters, and checkpoints are grouped for added convenience.

The EPA FT4/EU Stage IV technology in these excavators is simple, fuel efficient, fully integrated, and fully supported. It employs field-proven cooled exhaust gas recirculation (EGR) for reducing NO_X, and a diesel particulate filter (DPF) and diesel oxidation catalyst (DOC) to reduce particulate matter (PM). DPF cleaning happens automatically without impacting machine productivity. Minimum service interval is 3,000 hours and can be done by your John Deere dealer.

Large fuel tank and 500- and 5,000-hour engine and hydraulic oil-service intervals decrease downtime for routine maintenance.

75G

Engine	**75G**		
Manufacturer and Model	Yanmar 4TNV98C		
Non-Road Emission Standard	EPA Final Tier 4/EU Stage IV		
Net Power (ISO 9249)	42.4 kW (56.9 hp) at 2,000 rpm		
Cylinders	4		
Displacement	3.3 L (202 cu. in.)		
Aspiration	Natural		
Off-Level Capacity	70% (35 deg.)		
Cooling			
Variable-speed fan; viscous clutch			
Powertrain			
2-speed propel with automatic shift			
Maximum Travel Speed			
Low	3.1 km/h (1.9 mph)		
High	5.0 km/h (3.1 mph)		
Drawbar Pull	6650 kgf (14,661 lb.)		
Hydraulics			
Open center, load sensing			
Main Pumps	3 variable-displacement axial-piston pumps		
Maximum Pump Flow	2 x 72 + 56 L/m (2 x 19 + 15 gpm)		
Pilot Pump	1 gear		
Maximum Rated Flow	20 L/m (5.3 gpm)		
System Relief Pressure	3900 kPa (566 psi)		
System Operating Pressure			
Implement Circuits	26 000 kPa (3,771 psi)		
Travel Circuits	31 400 kPa (4,554 psi)		
Swing Circuits	25 200 kPa (3,655 psi)		
Controls	Pilot levers, short stroke, low effort; hydraulic pilot controls with shutoff lever		
Cylinders			
Heat-treated, chrome-plated, polished cylinder rods; hardened steel (replaceable bushings) pivot pins			
	Bore	*Rod Diameter*	*Stroke*
Boom (1)	115 mm (4.5 in.)	65 mm (2.6 in.)	885 mm (34.8 in.)
Arm (1)	95 mm (3.7 in.)	60 mm (2.4 in.)	900 mm (35.4 in.)
Bucket (1)	85 mm (3.3 in.)	55 mm (2.2 in.)	730 mm (28.7 in.)
Electrical			
Batteries	2 x 12 volt		
Battery Capacity	2 x 450 CCA		
Alternator Rating	50 amp		
Work Lights	2 halogen: 1 mounted on boom and 1 mounted on frame		
Undercarriage			
Rollers (each side)			
Carrier	1		
Track	5		
Shoes (each side)	40		
Track			
Adjustment	Hydraulic		
Chain	Sealed and lubricated		
Swing Mechanism			
Swing Speed	10.5 rpm		
Swing Torque	16 600 Nm (12,244 lb.-ft.)		

Ground Pressure	75G
450-mm (18 in.) Rubber Crawler Pads	39 kPa (5.6 psi)
450-mm (18 in.) Continuous Rubber Belt	39 kPa (5.6 psi)
450-mm (18 in.) Triple Semi-Grouser Shoes	38 kPa (5.4 psi)
600-mm (24 in.) Triple Semi-Grouser Shoes	27 kPa (3.9 psi)
Serviceability	
Refill Capacities	
Fuel Tank	135 L (35.7 gal.)
Cooling System	9.7 L (2.6 gal.)
Engine Oil with Filter	12.3 L (3.2 gal.)
Hydraulic Tank	56 L (15 gal.)
Hydraulic System	103 L (27 gal.)
Propel Gearbox (each)	1.2 L (1.3 qt.)
Operating Weights	
With 0.31-m³ (0.41 cu. yd.), 762-mm (30 in.), 313-kg (691 lb.) Bucket; 2.12-m (6 ft. 11 in.) Arm; 1305-kg (2,877 lb.) Counterweight; 2470-mm (8 ft. 1 in.) Blade; Full Fuel Tank; and 75-kg (165 lb.) Operator	
450-mm (18 in.) Rubber Crawler Pads	8143 kg (17,952 lb.)
450-mm (18 in.) Triple Semi-Grouser Shoes	7882 kg (17,377 lb.)
600-mm (24 in.) Triple Semi-Grouser Shoes	8265 kg (18,221 lb.)
450-mm (18 in.) Continuous Rubber Belt	7898 kg (17,412 lb.)
Optional Components	
Undercarriage (with the following)	
450-mm (18 in.) Rubber Crawler Pads	2903 kg (6,400 lb.)
450-mm (18 in.) Continuous Rubber Belt	2867 kg (6,321 lb.)
450-mm (18 in.) Triple Semi-Grouser Shoes	2851 kg (6,285 lb.)
600-mm (24 in.) Triple Semi-Grouser Shoes	3025 kg (6,669 lb.)
1-Piece Boom (with arm cylinder)	497 kg (1,096 lb.)
Arm with Bucket Cylinder and Linkage	
1.62 m (5 ft. 4 in.)	238 kg (525 lb.)
2.12 m (6 ft. 11 in.)	276 kg (608 lb.)
Boom Lift Cylinders (2), Total Weight	178 kg (392 lb.)
Counterweight, Standard	1305 kg (2,877 lb.)

Operating Dimensions

	Arm Length 1.62 m (5 ft. 4 in.)	*Arm Length 2.12 m (6 ft. 11 in.)*
Arm Digging Force (ISO)	35.5 kN (7,981 lb.)	30.7 kN (6,902 lb.)
Bucket Digging Force (ISO)	46.6 kN (10,476 lb.)	46.6 kN (10,476 lb.)
A Maximum Reach	6.43 m (21 ft. 1 in.)	6.92 m (22 ft. 8 in.)
A' Maximum Reach at Ground Level	6.26 m (20 ft. 6 in.)	6.76 m (22 ft. 2 in.)
B Maximum Digging Depth	4.11 m (13 ft. 6 in.)	4.61 m (15 ft. 1 in.)
B' Maximum Digging Depth at 2.44-m (8 ft.) Flat Bottom	3.75 m (12 ft. 4 in.)	4.32 m (14 ft. 2 in.)
C Maximum Cutting Height	7.21 m (23 ft. 8 in.)	7.61 m (25 ft. 0 in.)
D Maximum Dumping Height	5.12 m (16 ft. 10 in.)	5.51 m (18 ft. 1 in.)
E Minimum Swing Radius	1.81 m (5 ft. 11 in.)	2.17 m (7 ft. 1 in.)
F Maximum Vertical Wall	3.67 m (12 ft. 0 in.)	4.22 m (13 ft. 10 in.)
G Tail Swing Radius	1.29 m (4 ft. 3 in.)	1.29 m (4 ft. 3 in.)

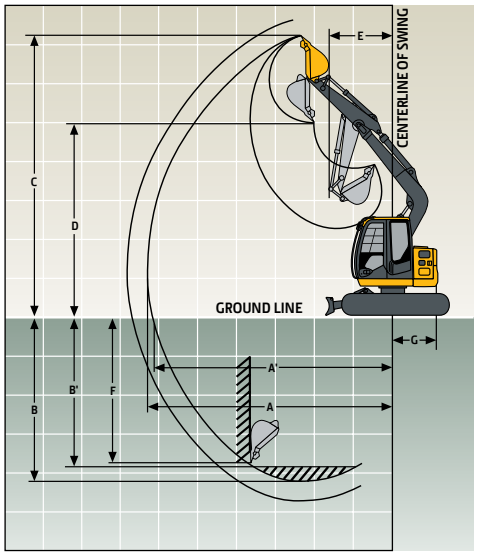

Machine Dimensions	75G	
	Arm Length 1.62 m (5 ft. 4 in.)	*Arm Length 2.12 m (6 ft. 11 in.)*
A Overall Length	6.30 m (20 ft. 8 in.)	6.37 m (20 ft. 11 in.)
B Overall Height	2.69 m (8 ft. 10 in.)	2.69 m (8 ft. 10 in.)
C Undercarriage Width		
With 450-mm (18 in.) Shoes	2.32 m (7 ft. 7 in.)	
With 600-mm (24 in.) Shoes	2.47 m (8 ft. 1 in.)	
D Rear-End Length/Swing Radius	1.29 m (4 ft. 3 in.)	
E Distance Between Idler/Sprocket Centerline	2.29 m (7 ft. 6 in.)	
F Undercarriage Length	2.92 m (9 ft. 7 in.)	
G Counterweight Clearance	0.73 m (29 in.)	
H Cab Height	2.69 m (8 ft. 10 in.)	
I Ground Clearance	360 mm (14 in.)	
J Upperstructure Width	2.32 m (7 ft. 7 in.)	
K Gauge Width	1.87 m (6 ft. 2 in.)	
L Blade Lift Height	360 mm (14 in.)	
Blade Height	480 mm (19 in.)	
Blade Width		
With 450-mm (18 in.) Shoes	2320 mm (7 ft. 7 in.)	
With 600-mm (24 in.) Shoes	2470 mm (8 ft. 1 in.)	
M Blade Cut Below Grade	300 mm (12 in.)	
N Blade Lift Angle	27 deg.	
O Track Width		
With 450-mm (18 in.) Shoes	0.45 m (18 in.)	
With 600-mm (24 in.) Shoes	0.60 m (24 in.)	

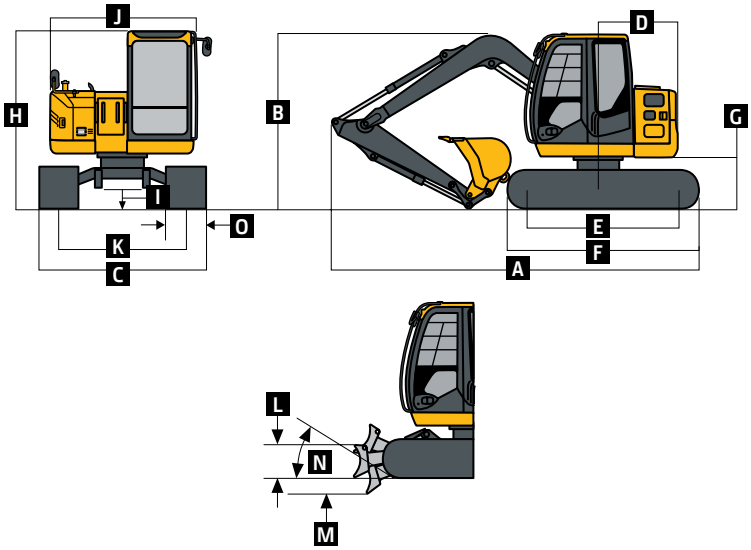

Lift Capacities

Boldface type indicates hydraulically limited capacities; lightface type indicates stability-limited capacities, in kg (lb.). Ratings are at bucket lift hook, using standard counterweight, situated on firm, level, uniform supporting surface. Total load includes weight of cables, hook, etc. Figures do not exceed 87% of hydraulic capacity or 75% of weight needed to tip machine. All lift capacities are based on ISO 10567.

	HORIZONTAL DISTANCE FROM CENTERLINE OF ROTATION							
	1.5 m (5 ft.)		3.0 m (10 ft.)		4.5 m (15 ft.)		6.0 m (20 ft.)	
LOAD POINT HEIGHT	Over Front	Over Side	Over Front	Over Side	Over Front	Over Side	Over Front	Over Side
With 3.72-m (12 ft. 8 in.) boom, 1.62-m (5 ft. 4 in.) arm, 0.28-m³ (0.37 cu. yd.) bucket, 450-mm (18 in.) rubber pads, and 2320-mm (7 ft. 9 in.) blade								
4.5 m (15 ft.)			**1616 (3,562)**	**1616 (3,562)**				
3.0 m (10 ft.)			**2223 (4,901)**	**2223 (4,901)**	**1829 (4,032)**	1605 (3,539)		
1.5 m (5 ft.)			**3192 (7,038)**	2752 (6,067)	**2121 (4,675)**	1538 (3,390)		
Ground Line			**3615 (7,969)**	2635 (5,810)	**2327 (5,131)**	1486 (3,275)		
–1.5 m (–5 ft.)	**4476 (9,867)**	**4476 (9,867)**	**3402 (7,500)**	2634 (5,807)				
With 3.72-m (12 ft. 8 in.) boom, 2.12-m (6 ft. 11 in.) arm, 0.28-m³ (0.37 cu. yd.) bucket, 450-mm (18 in.) rubber pads, and 2320-mm (7 ft. 9 in.) blade								
4.5 m (15 ft.)					**1475 (3,252)**	**1475 (3,252)**		
3.0 m (10 ft.)			**1834 (4,043)**	**1834 (4,043)**	**1613 (3,557)**	**1613 (3,557)**		
1.5 m (5 ft.)			**2864 (6,313)**	2797 (6,167)	**1958 (4,317)**	1541 (3,397)		
Ground Line			**3508 (7,734)**	2629 (5,797)	**2248 (4,956)**	1472 (3,246)		
–1.5 m (–5 ft.)	**3544 (7,813)**	**3544 (7,813)**	**3514 (7,746)**	2594 (5,718)	**2252 (4,964)**	1451 (3,199)		
–3.0 m (–10 ft.)	**5020 (11,068)**	**5020 (11,068)**	**2742 (6,044)**	2663 (5,870)				
With 3.72-m (12 ft. 8 in.) boom, 1.62-m (5 ft. 4 in.) arm, 0.28-m³ (0.37 cu. yd.) bucket, 600-mm (24 in.) shoes, and 2470-mm (8 ft. 1 in.) blade								
4.5 m (15 ft.)			**1616 (3,562)**	**1616 (3,562)**				
3.0 m (10 ft.)			**2223 (4,901)**	**2223 (4,901)**	**1829 (4,032)**	1630 (3,594)		
1.5 m (5 ft.)			**3192 (7,038)**	2796 (6,164)	**2121 (4,675)**	1563 (3,446)		
Ground Line			**3615 (7,969)**	2679 (5,906)	**2327 (5,131)**	1510 (3,330)		
–1.5 m (–5 ft.)	**4476 (9,867)**	**4476 (9,867)**	**3402 (7,500)**	2678 (5,903)				

Lift Capacities *(continued)* 75G

Boldface type indicates hydraulically limited capacities; lightface type indicates stability-limited capacities, in kg (lb.). Ratings are at bucket lift hook, using standard counterweight, situated on firm, level, uniform supporting surface. Total load includes weight of cables, hook, etc. Figures do not exceed 87% of hydraulic capacity or 75% of weight needed to tip machine. All lift capacities are based on ISO 10567.

	HORIZONTAL DISTANCE FROM CENTERLINE OF ROTATION							
	1.5 m (5 ft.)		3.0 m (10 ft.)		4.5 m (15 ft.)		6.0 m (20 ft.)	
LOAD POINT HEIGHT	**Over Front**	**Over Side**	**Over Front**	**Over Side**	**Over Front**	**Over Side**	**Over Front**	**Over Side**
With 3.72-m (12 ft. 8 in.) boom, 2.12-m (6 ft. 11 in.) arm, 0.28-m³ (0.37 cu. yd.) bucket, 600-mm (24 in.) shoes, and 2470-mm (8 ft. 1 in.) blade								
4.5 m (15 ft.)					**1475 (3,252)**	**1475 (3,252)**		
3.0 m (10 ft.)			**1834 (4,043)**	**1834 (4,043)**	**1613 (3,557)**	**1613 (3,557)**		
1.5 m (5 ft.)			**2864 (6,313)**	2841 (6,263)	**1958 (4,317)**	1566 (3,452)		
Ground Line			**3508 (7,734)**	2673 (5,893)	**2248 (4,956)**	1497 (3,301)		
–1.5 m (–5 ft.)	**3544 (7,813)**	**3544 (7,813)**	**3514 (7,746)**	2637 (5,814)	**2252 (4,964)**	1476 (3,254)		
–3.0 m (–10 ft.)	**5020 (11,068)**	**5020 (11,068)**	**2742 (6,044)**	2707 (5,967)				
With 3.72-m (12 ft. 8 in.) boom, 1.62-m (5 ft. 4 in.) arm, 0.28-m³ (0.37 cu. yd.) bucket, 450-mm (18 in.) continuous rubber belt, and 2470-mm (8 ft. 1 in.) blade								
3.0 m (10 ft.)			**2241 (4,940)**	**2241 (4,940)**				
1.5 m (5 ft.)			**3207 (7,070)**	2608 (5,750)				
Ground Line			**3620 (7,980)**	2499 (5,510)	**2327 (5,130)**	1415 (3,120)		
–1.5 m (–5 ft.)	**4527 (9,980)**	**4527 (9,980)**	**3393 (7,480)**	2499 (5,510)				

Buckets

A full line of buckets is offered to meet a wide variety of applications. Replaceable cutting edges are available through John Deere Parts. Optional side cutters add 150 mm (6 in.) to bucket widths.

Type Bucket	Bucket Width		Bucket Capacity		Bucket Weight		Bucket Dig Force (ISO)		Arm Dig Force (ISO) 1.62 m (5 ft. 4 in.)		Arm Dig Force (ISO) 2.12 m (6 ft. 11 in.)		Bucket Tip Radius		Number of Teeth
	mm	in.	m³	cu. yd.	kg	lb.	kN	lb.	kN	lb.	kN	lb.	mm	in.	
Heavy Duty	610	24	0.24	0.31	268	591	44	9,892	34	7,545	29	6,524	883	34.76	5
	762	30	0.31	0.41	313	691	44	9,892	34	7,545	29	6,524	883	34.76	6
	914	36	0.39	0.51	358	790	44	9,892	34	7,545	29	6,524	883	34.76	7
Ditching	1219	48	0.49	0.64	330	727	64	14,344	40	8,911	33	7,473	907	35.69	0

Bucket Selection Guide*

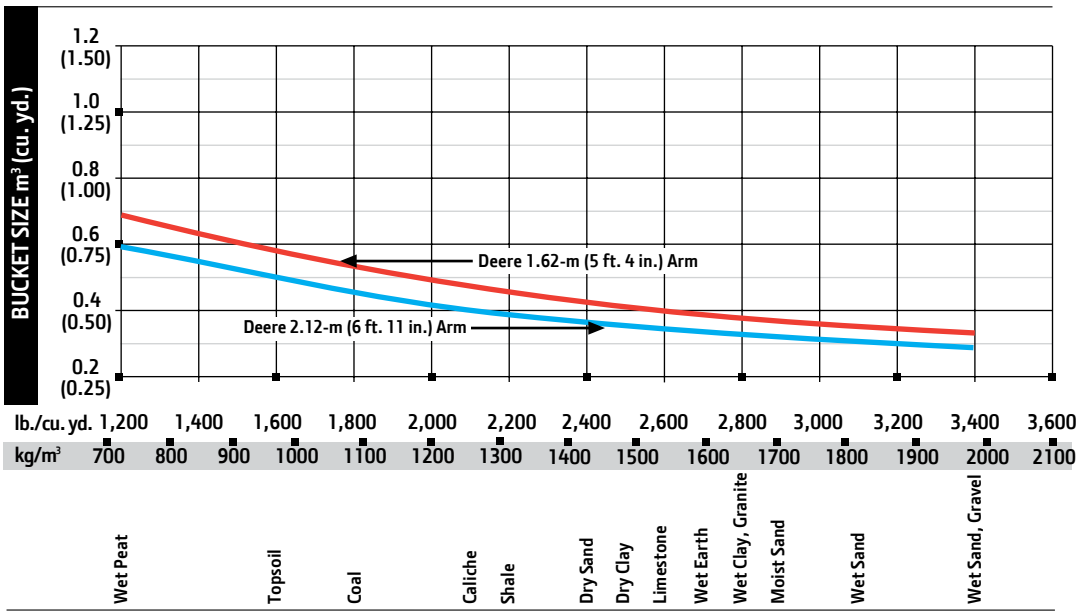

*Contact your John Deere dealer for optimum bucket and attachment selections. These recommendations are for general conditions and average use. Does not include optional equipment such as thumbs or couplers. Larger buckets may be possible when using light materials, for flat and level operations, less compacted materials, and volume loading applications such as mass-excavation applications in ideal conditions. Smaller buckets are recommended for adverse conditions such as off-level applications, rocks, and uneven surfaces. Bucket capacity indicated is SAE heaped.

85G

Engine	**85G**		
Manufacturer and Model	Yanmar 4TNV98C-WHBW		
Non-Road Emission Standard	EPA Final Tier 4/EU Stage IV		
Net Power (ISO 9249)	42.4 kW (56.9 hp) at 2,000 rpm		
Cylinders	4		
Displacement	3.3 L (202 cu. in.)		
Aspiration	Natural		
Off-Level Capacity	70% (35 deg.)		
Cooling			
Variable-speed fan; viscous clutch			
Powertrain			
2-speed propel with automatic shift			
Maximum Travel Speed			
Low	3.1 km/h (1.9 mph)		
High	5.0 km/h (3.1 mph)		
Drawbar Pull	6650 kgf (14,661 lb.)		
Hydraulics			
Open center, load sensing			
Main Pumps	3 variable-displacement axial-piston pumps		
Maximum Pump Flow	2 x 72 + 56 L/m (2 x 19 + 15 gpm)		
Pilot Pump	1 gear		
Maximum Rated Flow	20 L/m (5.3 gpm)		
System Relief Pressure	3900 kPa (566 psi)		
System Operating Pressure			
Implement Circuits	26 000 kPa (3,771 psi)		
Travel Circuits	31 400 kPa (4,554 psi)		
Swing Circuits	25 000 kPa (3,626 psi)		
Controls	Pilot levers, short stroke, low effort; hydraulic pilot controls with shutoff lever		
Cylinders			
Heat-treated, chrome-plated, polished cylinder rods; hardened steel (replaceable bushings) pivot pins			
	Bore	*Rod Diameter*	*Stroke*
Boom (1)	115 mm (4.5 in.)	65 mm (2.6 in.)	885 mm (34.8 in.)
Arm (1)	95 mm (3.7 in.)	60 mm (2.4 in.)	900 mm (35.4 in.)
Bucket (1)	85 mm (3.3 in.)	55 mm (2.2 in.)	730 mm (28.7 in.)
Electrical			
Batteries	2 x 12 volt		
Battery Capacity	2 x 450 CCA		
Alternator Rating	50 amp		
Work Lights	2 halogen: 1 mounted on boom and 1 mounted on frame		
Undercarriage			
Rollers (each side)			
Carrier	1		
Track	5		
Shoes (each side)	40		
Track			
Adjustment	Hydraulic		
Chain	Sealed and lubricated		
Swing Mechanism			
Swing Speed	10.5 rpm		
Swing Torque	16 600 Nm (12,244 lb.-ft.)		
Boom Swing			
Left	60 deg.		
Right	60 deg.		

Ground Pressure	85G
450-mm (18 in.) Rubber Crawler Pads	41.5 kPa (6.0 psi)
450-mm (18 in.) Continuous Rubber Belt	41.4 kPa (6.0 psi)
450-mm (18 in.) Triple Semi-Grouser Shoes	41.3 kPa (6.0 psi)
600-mm (24 in.) Triple Semi-Grouser Shoes	31.7 kPa (4.6 psi)
Serviceability	
Refill Capacities	
Fuel Tank	120 L (31.7 gal.)
Cooling System	9.7 L (2.6 gal.)
Engine Oil with Filter	12.3 L (3.2 gal.)
Hydraulic Tank	56 L (15 gal.)
Hydraulic System	103 L (27 gal.)
Propel Gearbox (each)	1.2 L (1.3 qt.)
Operating Weights	
With 0.31-m³ (0.41 cu. yd.), 762-mm (30 in.), 313-kg (691 lb.) Bucket; 2.12-m (6 ft. 11 in.) Arm; 1408-kg (3,104 lb.) Counterweight; Full Fuel Tank; and 75-kg (165 lb.) Operator	
2220-mm (7 ft. 3 in.) Blade and 450-mm (18 in.) Rubber Crawler Pads	8729 kg (19,244 lb.)
2220-mm (7 ft. 3 in.) Blade and 450-mm (18 in.) Triple Semi-Grouser Shoes	8677 kg (19,130 lb.)
2470-mm (8 ft. 1 in.) blade and 600-mm (24 in.) Triple Semi-Grouser Shoes	8874 kg (19,564 lb.)
2220-mm (7 ft. 3 in.) Blade and 450-mm (18 in.) Continuous Rubber Belt	8701 kg (19,182 lb.)
Optional Components	
Undercarriage (with the following)	
450-mm (18 in.) Rubber Crawler Pads	2871 kg (6,329 lb.)
450-mm (18 in.) Continuous Rubber Belt	2843 kg (6,268 lb.)
450-mm (18 in.) Triple Semi-Grouser Shoes	2819 kg (6,215 lb.)
600-mm (24 in.) Triple Semi-Grouser Shoes	2970 kg (6,548 lb.)
1-Piece Boom (with arm cylinder)	491 kg (1,082 lb.)
Arm with Bucket Cylinder and Linkage	
1.62 m (5 ft. 4 in.)	237 kg (522 lb.)
2.12 m (6 ft. 11 in.)	275 kg (606 lb.)
Boom Lift Cylinder	89 kg (196 lb.)
0.49-m³ (0.64 cu. yd.), 1219-mm (48 in.) Ditching Bucket	330 kg (728 lb.)
Counterweight (standard)	1408 kg (3,104 lb.)

Operating Dimensions

	Arm Length 1.62 m (5 ft. 4 in.)	*Arm Length 2.12 m (6 ft. 11 in.)*
Arm Digging Force (ISO)	35.5 kN (7,981 lb.)	30.7 kN (6,902 lb.)
Bucket Digging Force (ISO)	46.6 kN (10,476 lb.)	46.6 kN (10,476 lb.)
A Maximum Reach	7.21 m (23 ft. 8 in.)	7.70 m (25 ft. 3 in.)
A' Maximum Reach at Ground Level	7.05 m (23 ft. 2 in.)	7.55 m (24 ft. 9 in.)
B Maximum Digging Depth	3.99 m (13 ft. 1 in.)	4.51 m (14 ft. 10 in.)
B' Maximum Digging Depth at 2.44-m (8 ft.) Flat Bottom	3.62 m (11 ft. 11 in.)	4.20 m (13 ft. 9 in.)
C Maximum Cutting Height	6.79 m (22 ft. 3 in.)	7.14 m (23 ft. 5 in.)
D Maximum Dumping Height	4.77 m (15 ft. 8 in.)	5.08 m (16 ft. 8 in.)
E Minimum Swing Radius	2.74 m (9 ft. 0 in.)	2.89 m (9 ft. 6 in.)
F Maximum Vertical Wall	3.47 m (11 ft. 5 in.)	4.05 m (13 ft. 3 in.)
G Tail Swing Radius	1.49 m (4 ft. 11 in.)	1.49 m (4 ft. 11 in.)

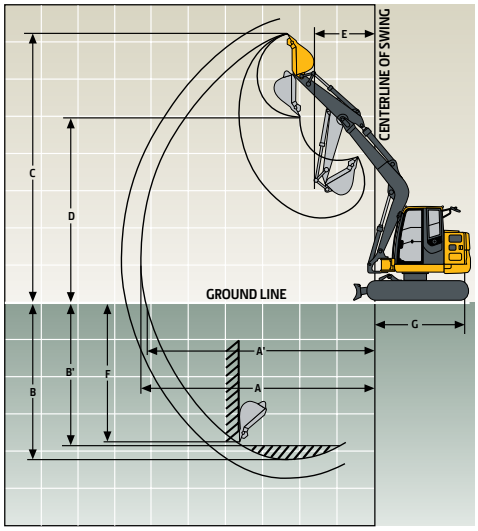

Machine Dimensions	85G	
	Arm Length 1.62 m (5 ft. 4 in.)	*Arm Length 2.12 m (6 ft. 11 in.)*
A Overall Length	6.64 m (21 ft. 9 in.)	6.82 m (22 ft. 5 in.)
B Overall Height with 450-mm (18 in.) Rubber Crawler Pads	2.61 m (8 ft. 7 in.)	
C Undercarriage Width		
With 450-mm (18 in.) Shoes	2.20 m (7 ft. 3 in.)	
With 600-mm (24 in.) Shoes	2.35 m (7 ft. 9 in.)	
D Rear-End Length/Swing Radius	1.49 m (4 ft. 11 in.)	
E Distance Between Idler/Sprocket Centerline	2.29 m (7 ft. 6 in.)	
F Undercarriage Length	2.92 m (9 ft. 7 in.)	
G Counterweight Clearance	0.72 m (28 in.)	
H Cab Height	2.53 m (8 ft. 4 in.)	
I Ground Clearance	360 mm (14 in.)	
J Upperstructure Width	2.32 m (7 ft. 7 in.)	
K Gauge Width	1.75 m (5 ft. 9 in.)	
L Blade Lift Height	340 mm (13 in.)	
Blade Height	460 mm (18 in.)	
Blade Width		
With 450-mm (18 in.) Shoes	2200 mm (7 ft. 3 in.)	
With 600-mm (24 in.) Shoes	2350 mm (7 ft. 9 in.)	
M Blade Cut Below Grade	320 mm (13 in.)	
N Blade Lift Angle	26 deg.	
O Track Width		
With 450-mm (18 in.) Shoes	0.45 m (18 in.)	
With 600-mm (24 in.) Shoes	0.60 m (24 in.)	

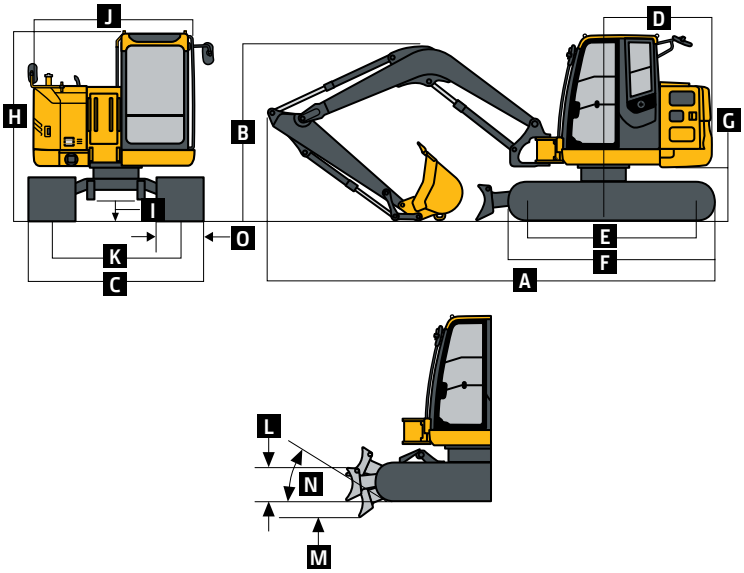

Lift Capacities

Boldface type indicates hydraulically limited capacities; lightface type indicates stability-limited capacities, in kg (lb.). Ratings are at bucket lift hook, using standard counterweight, situated on firm, level, uniform supporting surface. Total load includes weight of cables, hook, etc. Figures do not exceed 87% of hydraulic capacity or 75% of weight needed to tip machine. All lift capacities are based on ISO 10567.

	HORIZONTAL DISTANCE FROM CENTERLINE OF ROTATION							
	1.5 m (5 ft.)		3.0 m (10 ft.)		4.5 m (15 ft.)		6.0 m (20 ft.)	
LOAD POINT HEIGHT	Over Front	Over Side	Over Front	Over Side	Over Front	Over Side	Over Front	Over Side
With 3.67-m (12 ft. 2 in.) boom, 1.62-m (5 ft. 4 in.) arm, 0.28-m³ (0.37 cu. yd.) bucket, 450-mm (18 in.) rubber pads, and 2200-mm (7 ft. 3 in.) blade								
3.0 m (10 ft.)			**3432 (7,567)**	2887 (6,365)	**2312 (5,096)**	1580 (3,484)		
1.5 m (5 ft.)					**2819 (6,215)**	1481 (3,265)	**2078 (4,582)**	992 (2,188)
Ground Line			**2434 (5,367)**	**2434 (5,367)**	**3047 (6,717)**	1416 (3,121)		
–1.5 m (–5 ft.)			**4279 (9,433)**	2503 (5,518)	**2711 (5,976)**	1410 (3,109)		
With 3.67-m (12 ft. 2 in.) boom, 2.12-m (6 ft. 11 in.) arm, 0.28-m³ (0.37 cu. yd.) bucket, 450-mm (18 in.) rubber pads, and 2200-mm (7 ft. 3 in.) blade								
4.5 m (15 ft.)					**1735 (3,825)**	1656 (3,651)		
3.0 m (10 ft.)					**2044 (4,506)**	1597 (3,521)	**1809 (3,988)**	1022 (2,253)
1.5 m (5 ft.)					**2619 (5,773)**	1488 (3,280)	**1968 (4,339)**	986 (2,174)
Ground Line			**2577 (5,682)**	2445 (5,391)	**2992 (6,597)**	1403 (3,092)	**2069 (4,561)**	952 (2,098)
–1.5 m (–5 ft.)	**2683 (5,914)**	**2683 (5,914)**	**4770 (10,516)**	2448 (5,397)	**2868 (6,322)**	1377 (3,036)		
–3.0 m (–10 ft.)			**3130 (7,012)**	3130 (5,560)				
With 3.67-m (12 ft. 2 in.) boom, 1.62-m (5 ft. 4 in.) arm, 0.28-m³ (0.37 cu. yd.) bucket, 600-mm (24 in.) shoes, and 2470-mm (8 ft. 1 in.) blade								
3.0 m (10 ft.)			**3432 (7,567)**	2927 (6,453)	**2312 (5,096)**	1603 (3,535)		
1.5 m (5 ft.)					**2819 (6,215)**	1505 (3,317)	**2078 (4,582)**	1009 (2,224)
Ground Line			**2434 (5,367)**	**2434 (5,367)**	**3047 (6,717)**	1439 (3,172)		
–1.5 m (–5 ft.)			**4279 (9,433)**	2543 (5,606)	**2711 (5,976)**	1433 (3,160)		

Lift Capacities *(continued)* 85G

Boldface type indicates hydraulically limited capacities; lightface type indicates stability-limited capacities, in kg (lb.). Ratings are at bucket lift hook, using standard counterweight, situated on firm, level, uniform supporting surface. Total load includes weight of cables, hook, etc. Figures do not exceed 87% of hydraulic capacity or 75% of weight needed to tip machine. All lift capacities are based on ISO 10567.

	HORIZONTAL DISTANCE FROM CENTERLINE OF ROTATION							
	1.5 m (5 ft.)		3.0 m (10 ft.)		4.5 m (15 ft.)		6.0 m (20 ft.)	
LOAD POINT HEIGHT	Over Front	Over Side	Over Front	Over Side	Over Front	Over Side	Over Front	Over Side
With 3.67-m (12 ft. 2 in.) boom, 2.12-m (6 ft. 11 in.) arm, 0.28-m³ (0.37 cu. yd.) bucket, 600-mm (24 in.) shoes, and 2470-mm (8 ft. 1 in.) blade								
4.5 m (15 ft.)					**1735** **(3,825)**	1679 (3,702)		
3.0 m (10 ft.)					**2044** **(4,506)**	1620 (3,572)	**1809** **(3,988)**	1038 (2,289)
1.5 m (5 ft.)					**2619** **(5,773)**	1511 (3,332)	**1968** **(4,339)**	1002 (2,210)
Ground Line			**2577** **(5,682)**	2485 (5,479)	**2992** **(6,597)**	1426 (3,143)	**2069** **(4,561)**	968 (2,134)
–1.5 m (–5 ft.)	**2683** **(5,914)**	**2683** **(5,914)**	**4770** **(10,516)**	2488 (5,485)	**2868** **(6,322)**	1400 (3,087)		
–3.0 m (–10 ft.)			**3130** **(7,012)**	3130 (5,647)				
With 3.67-m (12 ft. 2 in.) boom, 2.12-m (6 ft. 11 in.) arm, less bucket, 450-mm (18 in.) continuous rubber belt, and 2200-mm (7 ft. 3 in.) blade								
4.5 m (15 ft.)					**1728** **(3,810)**	1579 (3,480)		
3.0 m (10 ft.)					**2050** **(4,520)**	1520 (3,350)	**1805** **(3,980)**	971 (2,140)
1.5 m (5 ft.)					**2626** **(5,790)**	1411 (3,110)	**1969** **(4,340)**	934 (2,060)
Ground Line			**2595** **(5,720)**	2309 (5,090)	**2994** **(6,600)**	1329 (2,930)	**2068** **(4,560)**	903 (1,990)
–1.5 m (–5 ft.)	**2708** **(5,970)**	**2708** **(5,970)**	**4758** **(10,490)**	2309 (5,090)	**2862** **(6,310)**	1306 (2,880)		
–3.0 m (–10 ft.)			**3139** **(6,920)**	2386 (5,260)				

Buckets

A full line of buckets is offered to meet a wide variety of applications. Replaceable cutting edges are available through John Deere Parts. Optional side cutters add 150 mm (6 in.) to bucket widths.

Type Bucket	Bucket Width		Bucket Capacity		Bucket Weight		Bucket Dig Force (ISO)		Arm Dig Force (ISO) 1.62 m (5 ft. 4 in.)		Arm Dig Force (ISO) 2.12 m (6 ft. 11 in.)		Bucket Tip Radius		Number of Teeth
	mm	in.	m³	cu. yd.	kg	lb.	kN	lb.	kN	lb.	kN	lb.	mm	in.	
Heavy Duty	610	24	0.31	0.40	287	633	54	12,061	38	8,491	32	7,162	1087	42.80	5
	762	30	0.41	0.53	333	735	54	12,061	38	8,491	32	7,162	1087	42.80	6
	914	36	0.50	0.66	380	837	54	12,061	38	8,491	32	7,162	1087	42.80	7
Ditching	1219	48	0.49	0.64	330	727	64	14,344	40	8,911	33	7,473	907	35.69	0

Bucket Selection Guide*

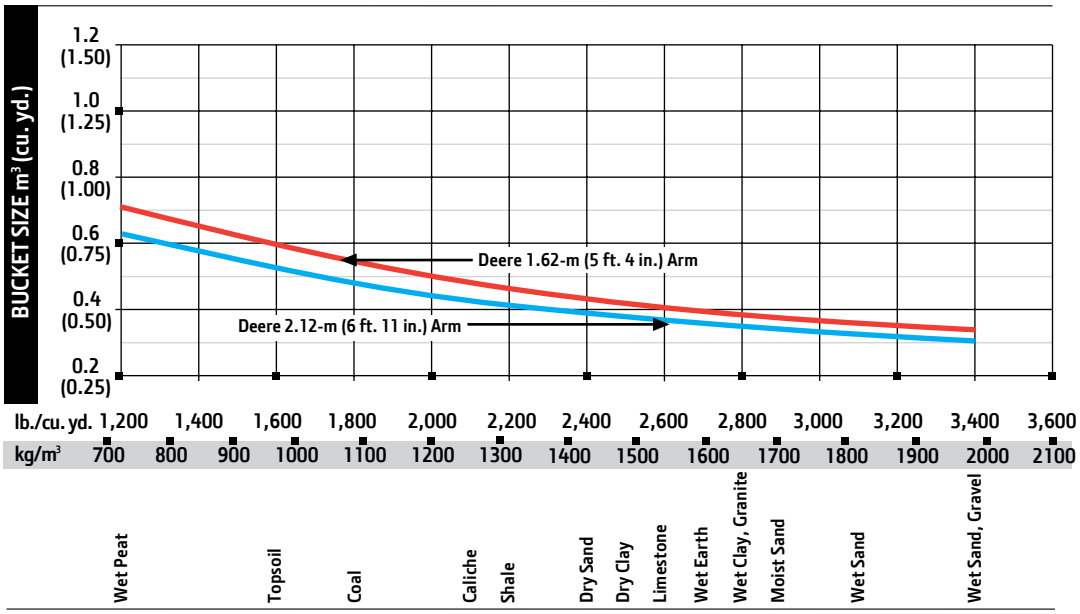

*Contact your John Deere dealer for optimum bucket and attachment selections. These recommendations are for general conditions and average use. Does not include optional equipment such as thumbs or couplers. Larger buckets may be possible when using light materials, for flat and level operations, less compacted materials, and volume loading applications such as mass-excavation applications in ideal conditions. Smaller buckets are recommended for adverse conditions such as off-level applications, rocks, and uneven surfaces. Bucket capacity indicated is SAE heaped.

Additional equipment

Key: ● Standard ▲ Optional or special

See your John Deere dealer for further information.

75G	85G	Engine
●	●	Auto-idle system
●	●	Batteries (2 – 12 volt)
●	●	Coolant recovery tank
●	●	Single-element air filter
●	●	Electronic engine control
●	●	Enclosed fan guard (conforms to SAE J1308)
●	●	Engine coolant to –37 deg. C (–34 deg. F)
●	●	Fuel filter with water separator
●	●	Full-flow oil filter
●	●	Radiator and oil cooler with dust-protective net
●	●	Glow-plug start aid
●	●	500-hour engine oil-change interval
●	●	70% (35 deg.) off-level capacity
●	●	Isolation mounted
		Hydraulic System
●	●	Reduced-drift valve for boom down, arm in
●	●	Auxiliary hydraulic valve section
●	●	Spring-applied, hydraulically released automatic swing brake
●	●	Auxiliary hydraulic-flow adjustments through monitor
●	●	5,000-hour hydraulic oil-change interval
▲	▲	Auxiliary hydraulic lines
▲	▲	Auxiliary pilot and electric controls
▲	▲	Hydraulic filter restriction indicator kit
▲	▲	Load-lowering control device
▲	▲	Single-pedal propel control
▲	▲	Control pattern-change valve
		Undercarriage
●	●	Planetary drive with axial piston motors
●	●	Propel motor shields
●	●	Spring-applied, hydraulically released automatic propel brake
●	●	2-speed propel with automatic shift
●	●	Upper carrier roller (1)
●	●	Sealed and lubricated track chain
●	●	Undercarriage with blade
▲	▲	Triple semi-grouser shoes, 450 mm (18 in.)
▲	▲	Triple semi-grouser shoes, 600 mm (24 in.)
▲	▲	Rubber crawler pads, 450 mm (18 in.)
▲	▲	Rubber belt, continuous, 450 mm (18 in.)

75G	85G	Upperstructure
●		Counterweight, 1305 kg (2,877 lb.)
	●	Counterweight, 1408 kg (3,104 lb.)
●	●	Right- and left-hand mirrors
●	●	Vandal locks with ignition key: Cab door / Engine hood / Fuel cap / Service doors
●	●	Remote-mounted engine oil and fuel filters
		Front Attachments
●	●	Centralized lubrication system
●	●	Dirt seals on all bucket pins
●	●	Less boom and arm
●	●	Oil-impregnated bushings
●	●	Reinforced resin thrust plates
●	●	Tungsten carbide thermal coating on arm-to-bucket joint
▲	▲	Arm, 1.62 m (5 ft. 4 in.)
▲	▲	Arm, 2.12 m (6 ft. 11 in.)
▲	▲	Attachment quick-couplers
▲	▲	Buckets: Ditching / Heavy duty / Heavy-duty high capacity / Side cutters and teeth
		Operator's Station
●	●	Meets ISO 12117-2 for ROPS
●	●	Adjustable independent control positions (seat-to-pedals)
●	●	AM/FM radio
●	●	Auto climate control/air conditioner with heater and pressurizer
●	●	Built-in operator's manual storage compartment and manual
●	●	Cell-phone power outlet, 12 volt, 60 watt, 5 amp
●	●	Coat hook
●	●	Deluxe cloth suspension seat with adjustable armrests
●	●	Floor mat
●	●	Front windshield wiper with intermittent speeds
●	●	Gauges (illuminated): Engine coolant / Fuel
●	●	Horn, electric
●	●	Hour meter, electric
●	●	Hydraulic shutoff lever, all controls
●	●	Hydraulic warm-up control
●	●	Interior light

75G	85G	Operator's Station *(continued)*
●	●	Large cup holder
●	●	Machine Information Center (MIC)
●	●	Mode selectors (illuminated): Power modes (2) / Travel modes (2 with automatic shift) / Work mode (1)
●	●	Multifunction, color LCD monitor with: Diagnostic capability / Multiple-language capabilities / Maintenance tracking / Clock / System monitoring with alarm features: Auto-idle indicator, engine air cleaner restriction indicator light, engine check, engine coolant temperature indicator light with audible alarm, engine oil pressure indicator light with audible alarm, low-alternator-charge indicator light, low-fuel indicator light, fault-code alert indicator, fuel-rate display, wiper-mode indicator, work-lights-on indicator, and work-mode indicator
●	●	Motion alarm with cancel switch (conforms to SAE J994)
●	●	Auxiliary hydraulic control switches in right console lever
●	●	SAE 2-lever control pattern
●	●	Seat belt, 51 mm (2 in.), retractable
●	●	Tinted glass
●		Transparent tinted overhead hatch
	●	Transparent tinted overhead window
●	●	Hot/cold beverage compartment
▲	▲	Seat belt, 76 mm (3 in.), non-retractable
▲	▲	Protection screens for cab front, rear, and side
▲		Window vandal-protection covers
		Electrical
●	●	50-amp alternator
●	●	Blade-type multi-fused circuits
●	●	Positive-terminal battery covers
▲	▲	JDLink™ wireless communication system (available in specific countries; see your dealer for details)
		Lights
●	●	Work lights: Halogen / 1 mounted on boom / 1 mounted on frame

Net engine power is with standard equipment including air cleaner, exhaust system, alternator, and cooling fan at test conditions specified per ISO 9249. No derating is required up to 3050-m (10,000 ft.) altitude. Specifications and design subject to change without notice. Wherever applicable, specifications are in accordance with SAE standards. Except where otherwise noted, these specifications are based on units with standard equipment; 0.31-m^3 (0.41 cu. yd.), 762-mm (30 in.), 313-kg (691 lb.) buckets; 450-mm (18 in.) rubber crawler pad shoes; 2.12-m (6 ft. 11 in.) arms; full fuel tanks; and 75-kg (165 lb.) operators; a 75G unit with 1305-kg (2,877 lb.) counterweight; and an 85G unit with 1408-kg (3,104 lb.) counterweight.

SAFETY live with it

JohnDeere.com